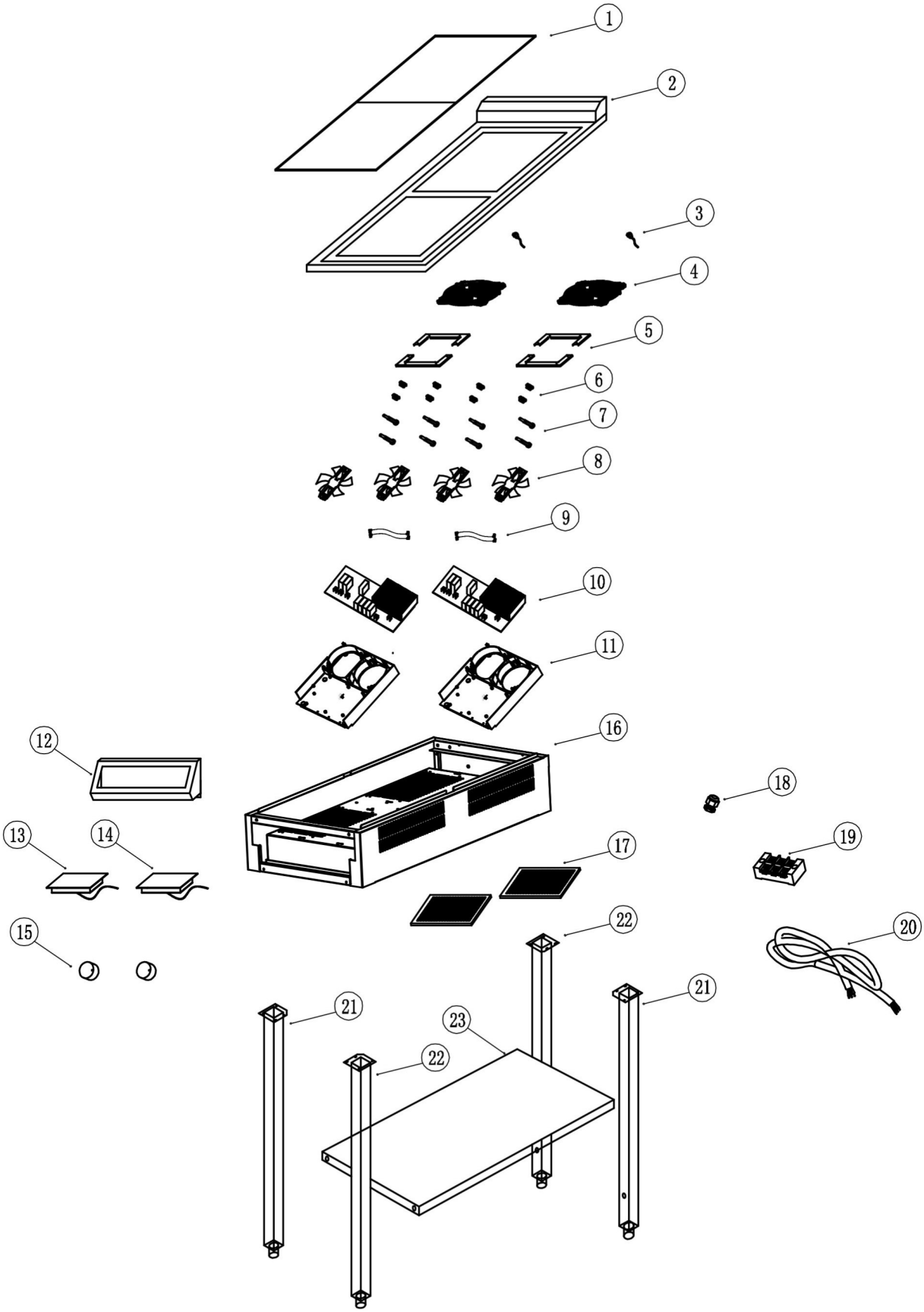


| | | | |
|---|---|---|---|
| Bartscher | Induktionskocher 2P 35-1 TCK<br>Artikel-Nr.: 105760 | Explosionszeichnung<br>Datum 31.10.2023 | Seite<br>1 / 2 |

| Pos. | Artikelbeschreibung | Description of item | Artikel Nr./Item No. |
|---|---|---|---|
| 1 | Glasplatte | glassplate | E010576001 |
| 2 | Abdeckrahmen | top cover | E010576002 |
| 3 | Fühler | Sensor | E010576003 |
| 4 | Heizspule | Heating coil | E010576004 |
| 5 | Metallträger für Heizspule | Metal supporting for heating coil | E010576005 |
| 6 | Feder | Spring for heating coil | E010576006 |
| 7 | Halterung | Plastic supporting | E010576007 |
| 8 | Lüfter | Fan | E010599111 |
| 9 | Verbindungskabel | Connect cable | E010576009 |
| 10 | Hauptplatine | Main board | E010592408 |
| 11 | Isolierung | insulation | E010576011 |
| 12 | Rahmen für Bedienfeld | Frame for control panel | E010576012 |
| 13 | Bedienfeld komplett mit 600mm Kabel | Control panel complete 600mm cable | E010576013 |
| 14 | Bedienfeld komplett mit 800mm Kabel | Control panel complete 800mm cable | E010576014 |
| 15 | Knebel | Knob | E010582911 |
| 16 | Gehäuse | housing | E010576016 |
| 17 | Filter | Filter | E016291337 |
| 18 | PG19-Verschraubung | PG19 screw joint | E010576018 |
| 19 | Kabelhülse | 45A cable arrangement | E010576019 |
| 20 | Anschlusskabel | Plug cord | E010576020 |
| 21 | Standbein links | leg left | E010576021 |
| 22 | Standbein rechts | leg right | E010576022 |
| 23 | Bodenplatte | bottom plate | E010576023 |